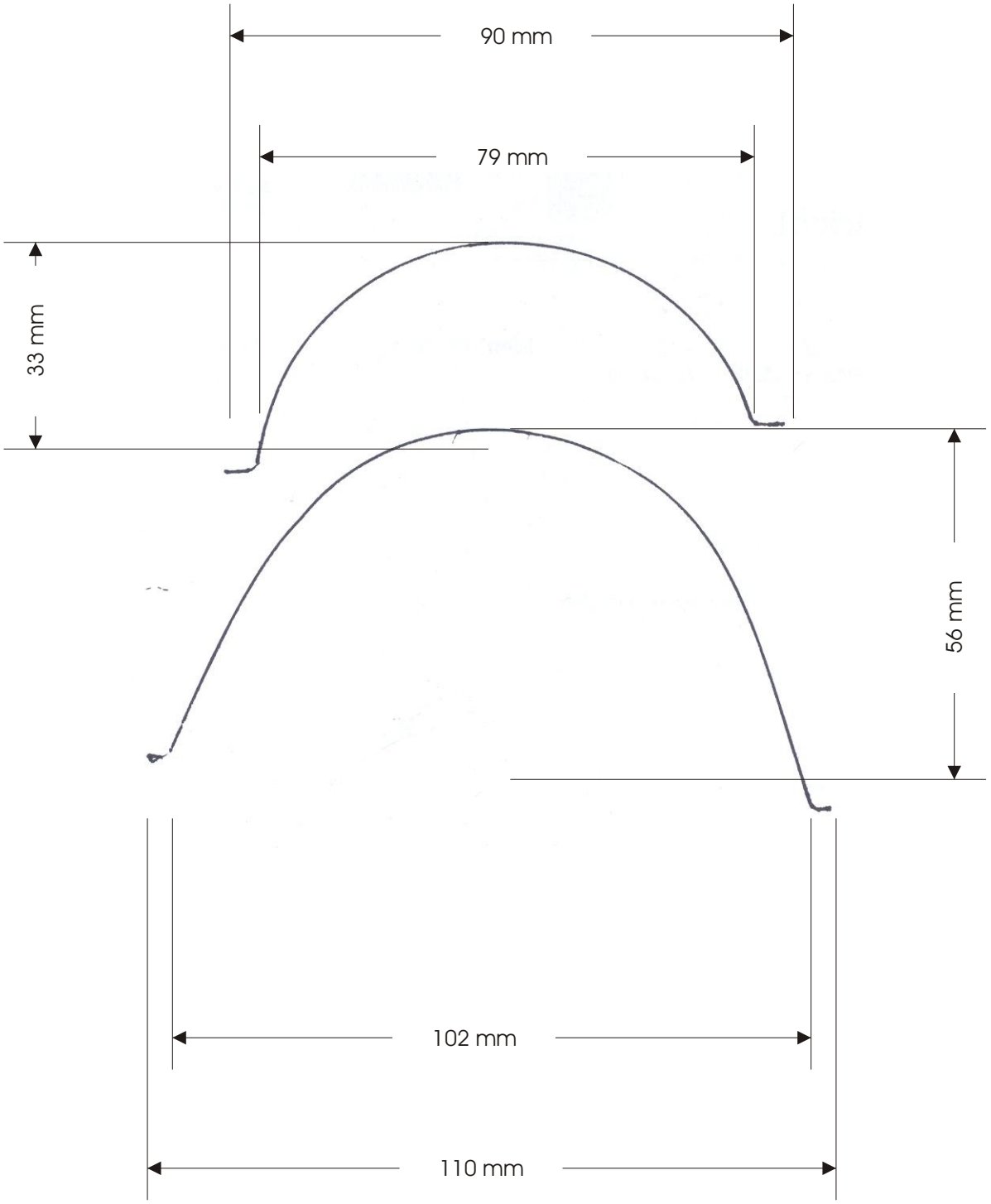
90 mm
79 mm
33 mm
56 mm
102 mm
110 mm